EM-EVDC

CHARGER FOR ELECTRIC VEHICLES EM-EVDC

CATEGORY:

ELECTROMOBILITY

CERTIFICATIONS

The EM-EVDC electric vehicle charger has been designed for use in generally available commercial charging stations. The device is equipped with an intuitive user interface, one or two DC charging points and one AC charging point.
The device is characterized by a modular structure, which allows you to configure its equipment in accordance with the user's requirements, moreover, such a solution significantly reduces the time and costs of inspections, maintenance and service.

Description

The EM-EVDC charger is designed to charge electric car batteries with direct current through CCS and CHAdeMO connectors. The charger can be operated both indoors, e.g. garages, shelters or underground car parks, and outdoors.
The EM-EVDC series of chargers is intended for companies and organizations that want to provide the service of publicly available vehicle charging. These devices are adapted to work "online" with the system of the charging service provider.

Compliance with standards: IEC 61851-1; IEC 61851-21,22: 2001; IEC 61851-23,24: 2014; ISO15118-1-2013; ISO15118-2-2014; ISO 15118-3: 2015; IEC 62196-1-2014; IEC 62196-3-2014; DIN 70121-2014.

Features/Technical specification

Supply voltage	3x260V÷530V, 50/60Hz
Efficiency	≥95%
Power factor	≥0,99
Output voltage	150-750V DC or 150-1000V DC
Output current	up to 200A DC
Environmental protection	P55
Mechanical protection	IK10
Working environment humidity	5% ~ 95% without condensation
Working temperature	-30°C ÷ +70°C
Protocol	OCPP 1.6 JSON or SOAP
User authorization type	- RFID card charging service provider - authorization via the application
Enclosure material	Stainless or coated steel
Dimensions	750/1885/923 mm
Length of the charging cable	Up to 5m

Functions

- DC charging with a power of up to 150kW
- two stations CCS 2 or CCS 2 + CHAdeMO
- charging with alternating current with a power of up to 22 kW (cable with a plug type 2)
- load balancing within the charging station
- convenient handles for storing the cable after charging the vehicle

Elektrometal SA
43-400 Cieszyn
ul. Stawowa 71
em@elektrometal.com.pl
tel: +48 33 8575 200
fax: +48 33 8575 205

www.elektrometal.eu
version of day: 2022-05-05

- measurement of the supplied electricity for each charging station
- RFID card reader
- touchscreen

Design and operation

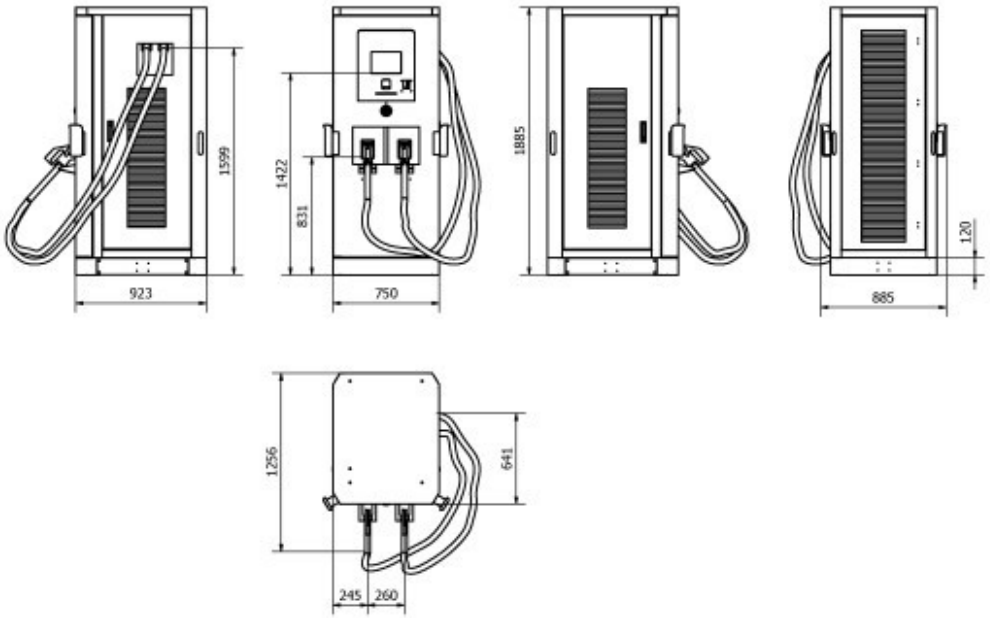

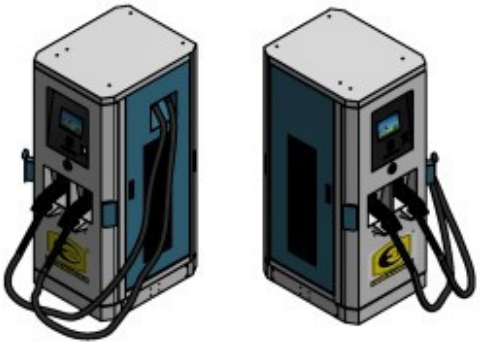

Elektrometal SA
43-400 Cieszyn
ul. Stawowa 71
em@elektrometal.com.pl
tel: +48 33 8575 200
fax: +48 33 8575 205

www.elektrometal.eu
version of day: 2022-05-05

PRODUKTY TYPU HMC OŚWIETLENIE PRZEMYSŁOWE USŁUGI GÓRNICTWO GAZOWNICTWO