POH-SUW

POH-SUW LAMP

Lamp desgined primarily to be used on cranes, however its construcion allows freely for any other application. It's intended for installation on machines and devices to illuminate the selected spot of observation with red or white light.

Technical characteristics

Rated voltage	100-240V 50-60Hz
Protection class	I
Ingress protection of luminaire	IP 65 IP 66 - on request
Weight	4 kg
External dimensions - without handle - with handle	 135 x 135 x 220 mm 135 x 135 x 275 mm
Luminous flux of luminaire - POH-SUW (red); - POH-SUW/B (white);	 1500 lm 3000 lm
Power	25 W
Cable gland	M20x1,5

Design and operation

- body made from aluminum;
- lampshade made from hardened glass;
- source of light - LED.

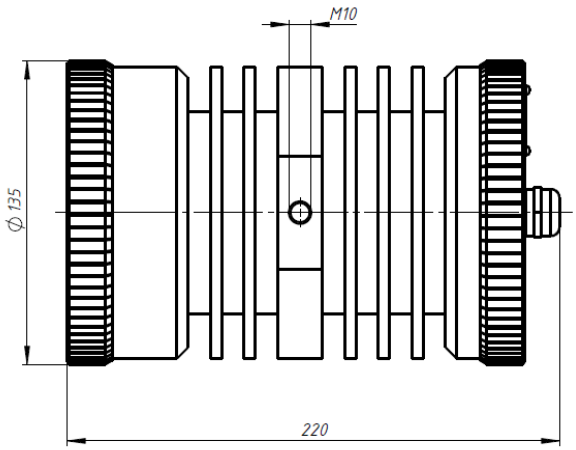

CATEGORY:

NON-EXPLOSION PROOF LUMINAIRES

CERTIFICATIONS

CE

Elektrometal SA
43-400 Cieszyn
ul. Stawowa 71
em@elektrometal.com.pl
tel: +48 33 8575 200
fax: +48 33 8575 205

www.elektrometal.eu

version of day: 2019-06-17

PRODUKTY TYPU HMC OŚWIETLENIE PRZEMYSŁOWE USŁUGI GÓRNICTWO GAZOWNICTWO